OPERATION MANUAL
ROLLER SHUTTER MOTORS

The manufacturer of the motors utilizes most advanced production techniques combined with the latest technologies available to provide reliability with diverse functionality. They are simple to install and are proved to be ideal accessories to a wide variety of applications.

The motors can be installed to both Left and Right sides of openings and can be equipped for direct-wiring and remote-control operations when power is disconnected or temporarily unavailable therefore making them ideal for installations in areas subject to frequent power cuts.

I. Work Environment and Conditions

1. Working temperature:-15℃ to 40℃
2. Relative working humidity: 90% at 25℃
3. Short-term working:
   A Continual Single-Phase operation should not exceed 8 minutes
   B Continual Three-phase operation should not exceed 15 minutes

II. Main Specifications and Technical Parameters for Standard and 'F' Type

Model	Power (w)	Set load	Set load		Max lifting height (m)		Max external diameter of Door (m)	Chain No.	Weight of host motor (kg)
		Lifting force (kg. f)	Output torque N. m	Output turn Speed r/min	Laths thickness				
					12	20			
220V 50Hz									
300-1P	180	200	84	5.1	4	4	0.33	06B	6.8
400-1p	180	400	225	4.5	6	6	0.41	08B	17.5
500-1p	370	500	343	4.8	6	6	0.38	10A	12.8
600-1p	370	600	412	4.8	6	6	0.38	10A	12.8
800-1p	400	800	647	3.94	7	6.7	0.42	10A	13.8
1000-1p	400	1000	809	3.75	6	8	0.47	10A	13.8
380V 50Hz									
300-3p	180	300	168	4.8	5	6	0.38	10A	11.8
400-3p	180	400	225	4.5	6	6	0.41	08B	17.5
500-3p	250	500	343	4.8	6	6	0.38	10A	12.8
600-3p	250	600	412	4.8		6	0.38	10A	12.8
800-3p	300	800	647	3.94	7	6.7	0.42	10A	12.8
1000-3p	400	1000	809	3.75	6	8	0.47	10A	13.8
1300-3p	600	1300	1401	4.4	9.5	7	0.45	12A	22
1500-3p	600	1500	1671	5.2	12	7.9	0.48	16A	22
2000-3p	750	2000	2450	3.6	12	12	0.65	16A	29

Note: 'F' =Fire Safety Models

Product Characteristics

- Simple & pleasing design of structure
- Good drive/size ratio
- Selected elements ensure safe working and reliability
- Low noise
- Small oscillation
- Lightweight
- Safety Device in of chain-break

III. Installation & Testing

1. The motors are produced for standard mounting to the right of the opening (viewed form inside).

   If you wish to install to the left side, it is necessary to loosen the bolts on the brake-shell.

   This will allow you to turn the shell 180° and then re-tighten the bolts.

   Note: The white and green lines of the switches should change positions.

2. The support board of the chain-wheel can be installed horizontally, according to the specific situation-as shown in Fig. 3-or it can be fixed within a range of 0-45 degrees. When the support board is not installed horizontally the brake-shell must be turned so that the loop-type hand-pull chain can lie vertically in a normal manner.

   Note: Special attention must be given to the joint of the shell-body and the top cover of the motor. When you are certain that there is no gap then tighten the bolts (diagonally). If a gap exists, and is allowed, the braking efficiency could be affected.

- The roller shutter door motors should be installed exactly horizontally.
- The roller axle of the shutter should door should be homocentric and horizontal.
- The roller shutter should be free of any obstructions.
- The vertical hanging length of the chain must be adjusted within 3-6mm-adjustment should be made before hanging the shutter onto the roller axis.
- It is strictly forbidden to pull on the motor down lead.
- External power cord should be minimum 1mm diameter.
- Special attention should be given to protecting the motor from humidity and rain to prevent short-circuiting.

The phase order must not be violated for three-phase motors. When the rise-up becomes downside the motors must be immediately stopped for readjustment of the phase order. If an interim power source is used for testing, attention should be given to connect in correct sequence when normal power source is introduced.

The correct operation approach is that when the rise-up button on the White line is pressed, the motor should turn anti-clockwise, allowing the position limiting device to function-see Fig . 1 for derails. Otherwise the shutter door would be out of control and will be damaged.

The motor must be satisfactorily earthed to prevent potential injury from shocks. The earthing connection bolts should be fixed to the chain wheel support board OR electric appliance control box.

Position Limiting Diagram

Fig.1 **When the motor is to be fixed on the left** **When the motor is to be fixed on the right**

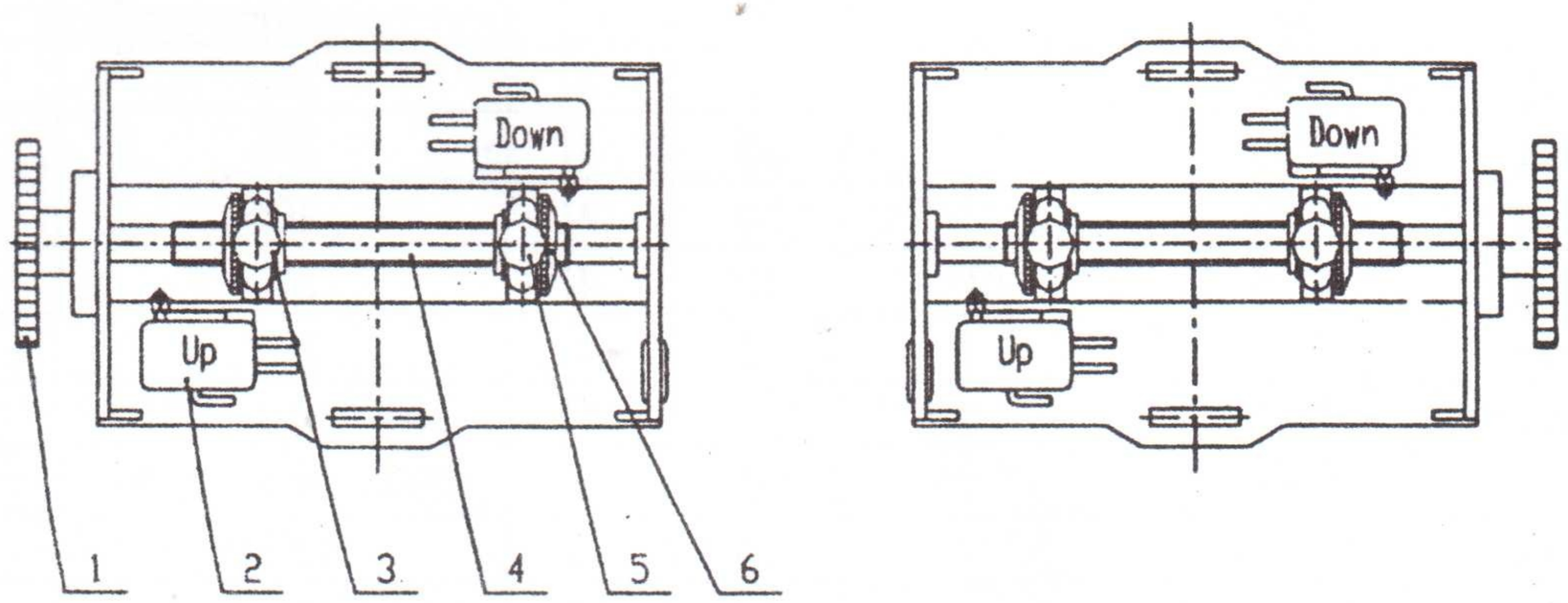

Serial Number	1	2	3	4	5	6
Name	Position limiting gear	Joggling switch	Locking bolt	Gearing wire	Position limiting Screw nut	Position limiting slide piece

Drum install Diagram

Fig.2

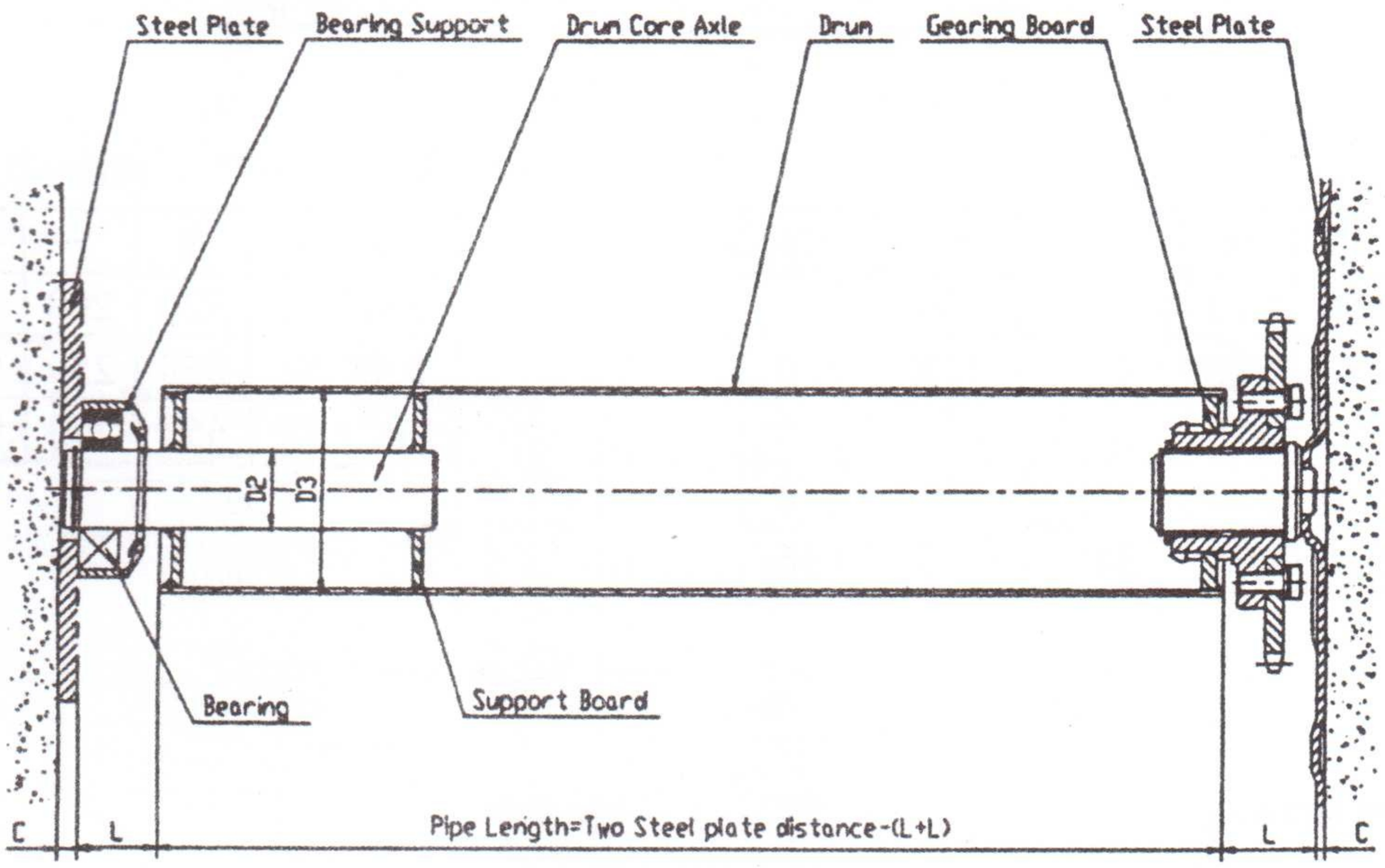

Note: Right side install, D1 Shutter Door Motor Model

Support Plate Install Diagram

A Model **Common Model**

model	D2	D3	L	C	Axle	remark
200Kg	Φ30	3″ /4″	35	3	206	
300Kg	Φ30	4″	35	4	206	
400Kg	Φ30	4″	35	3	206	
500Kg	Φ35	4″ /5″	35	4	207	
600Kg	Φ35	5″	35	4	207	
800Kg	Φ35	6″	45	5	207 and 1207	
1000Kg	Φ40	6″	45	5	208 and 1208	
1300Kg	Φ40	8″	45	12	UCF208	
1500Kg	Φ40	8″	55	12	UCF208	
2000Kg	Φ60	10″	85	16	UCF212	Side mount

Fig.3

A Model **Common Model**

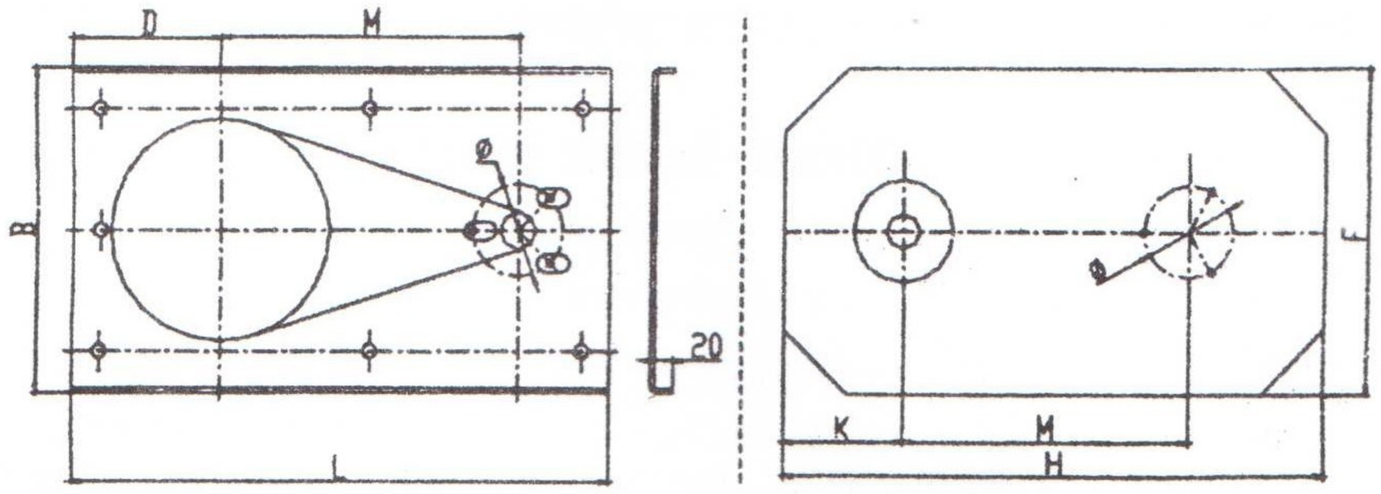

Code	L	B	M	D	Φ
200 kg	450	220	264	100	
400 kg	450	250	273	115	100
300-600 kg	522	310	302.5	150	100
800 kg	585	350	316	175	156
1000 kg	620	400	345	183	156

Code	H	F	K	M	Φ
1300 kg	520	200	80	347	186
1500 kg	550	250	90	364	186
2000 kg	650	250	96	454	186

Plane mount normal

220KV Electric Wiring Diagram **(300kg——1000kg)**

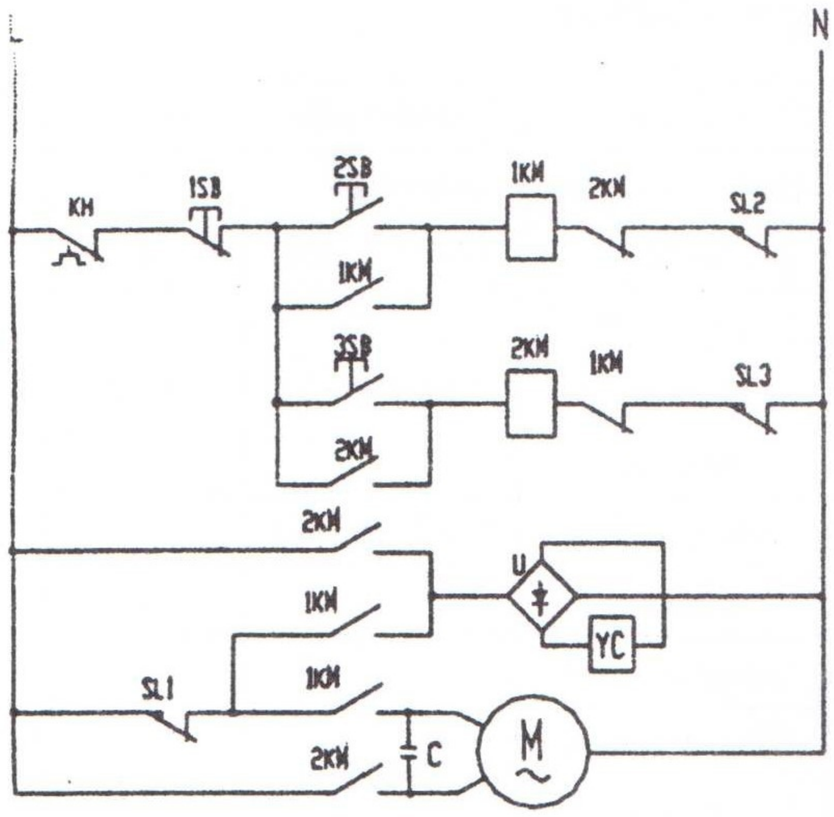

Symbol	Name	Size& Model	Quantity
KH	Heat Protector	J0k—SF—1	1
1SB、2SB、3SB	Switch	2 open,1 close	1
SL1、SL2、SL3	Top and bottom Buttons	JWL—1—11	3
1KM、2KM	Small relay	CJXZ—6.3/0.1	2
C	Capacitor	16-30μf 450VAC	1
U	Rectifier		1
YC	Magnet coil		1
M ~	Single—phase Motor	~220V	1

220KV Electric Wiring Diagram

(300kg——1000kg)

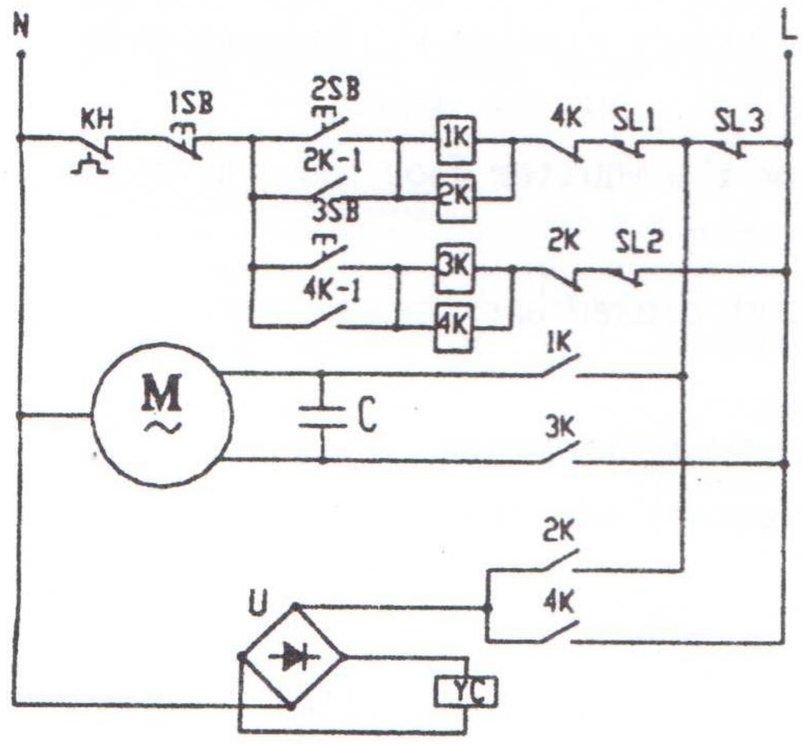

Symbol	Name	Size& Model	Quantity
KH	Heat Protector	J0k—SF—1	1
1SB、2SB、3SB	Switch	2open,1 close	1
SL1、SL2、SL3	Top and bottom Buttons	JWL—1—11	2-4
1K—4K	Small relay	JQX—13F	4
C	Capacitor	16-30μf 450VAC	1
U	Rectifier		1
YC	Magnet coil		1
M ~	Single—phase Motor	~220V	1

380KV Electric Wiring Diagram

300kg——1000kg)

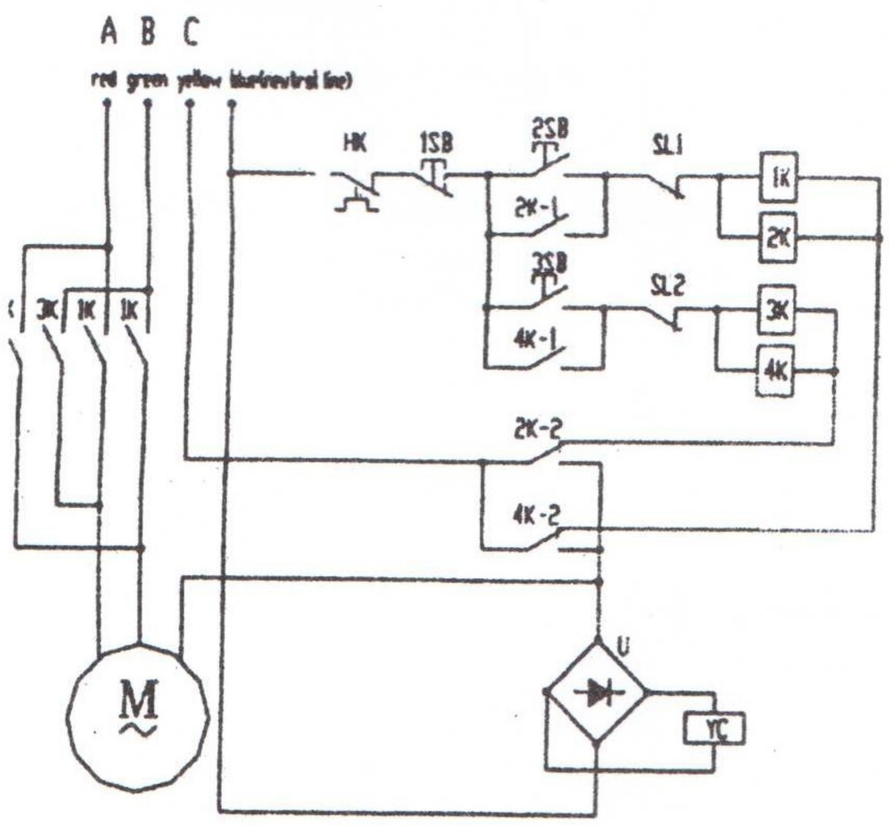

Symbol	Name	Size& Model	Quantity
KH	Heat Protector	J0k—SF—1	1
1SB、2SB、3SB	Switch	2 open,1 close	1
SL1、SL2	Top and bottom Buttons	JWL—1—11	2-4
1K—4K	Small relay	JQX—13F	4
U	Rectifier		1
YC	Magnet coil		1
M ~	Single—phase Motor	~380V	1

380KV Electric Wiring Diagram

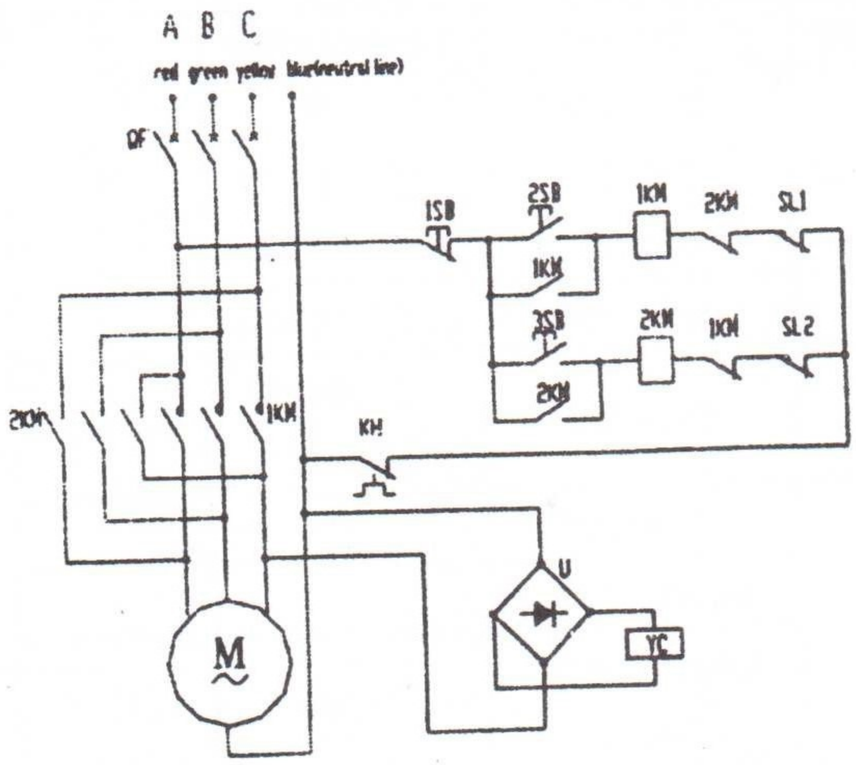

(1300kg——2000kg)

Symbol	Name	Size& Model	Quantity
KH	Heat Protector	J0k—SF—1	1
1SB、2SB、3SB	Switch	2 open,1 close	1
SL1、SL2	Top and bottom Buttons	JWL—1—11	2—4
1KM、2KM	Small relay	CJXZ—6.3/0.1	2
U	Rectifier		1
YC	Magnet coil		1
M ~	Single—phase Motor	~380V	1

IV. Usage

Press "UP" or "down" buttons. If there is no reaction-press the "stop" button to avoid potential damage to the motor.

Check to see if there is any blockage under the shutter door before closing it .Passage under the shutter is forbidden during the process of starting or closing the door.

When closing the shutter, with the power off, lightly pull on the shutter door loop for slide —down at even controlled speed.

Relax the pull on the on the pulling loop when door is almost closed and then pull again to close it completely.

Motors for fire shutter doors are equipped with separate control boxes-specially qualified personnel should undertake regular and preventative maintenance and inspection.

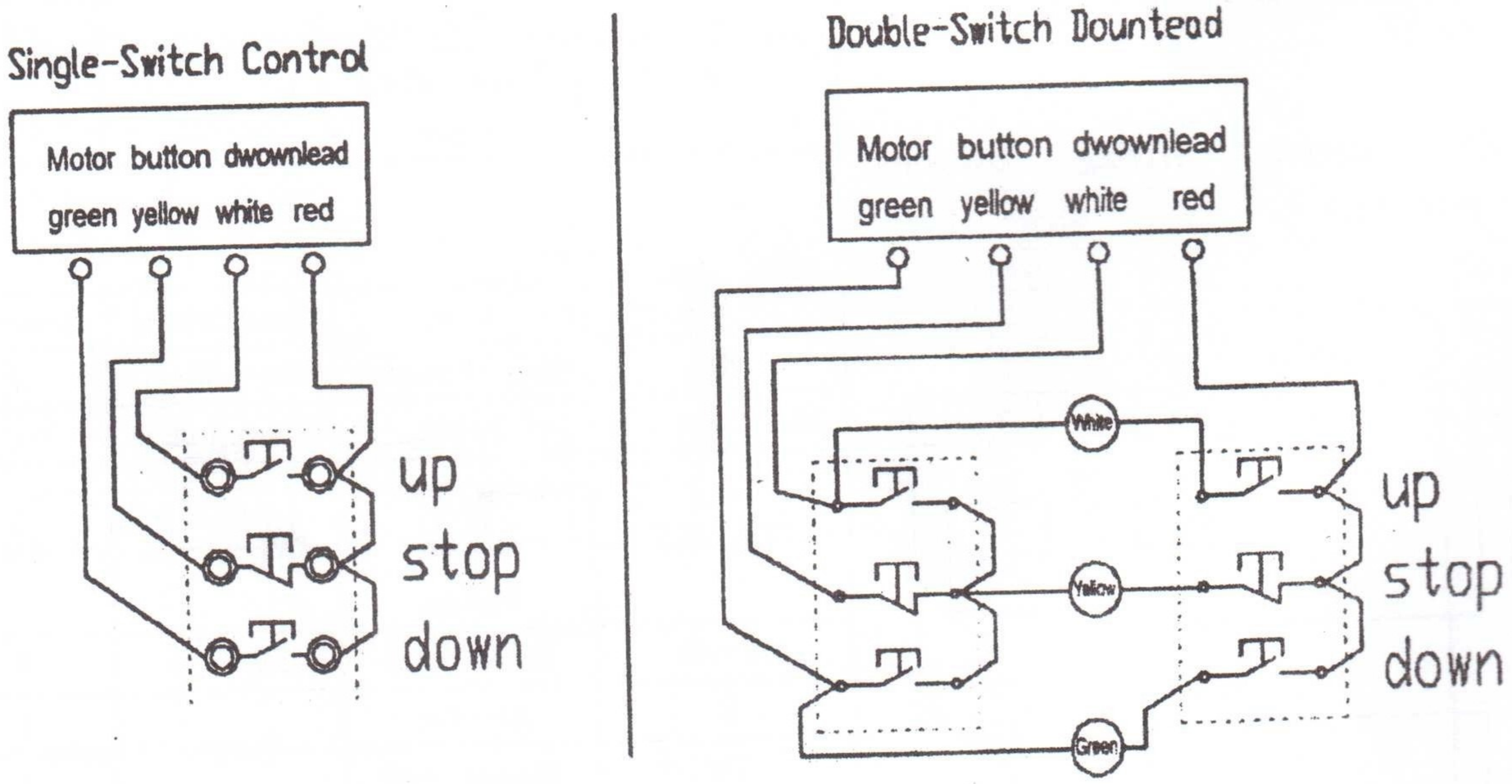

☆ The above is right—side installation—see Connection diagram; change the position of white and green lines in left—side installation.

Remote Controller and Shutter door Motor (Switch) Connection

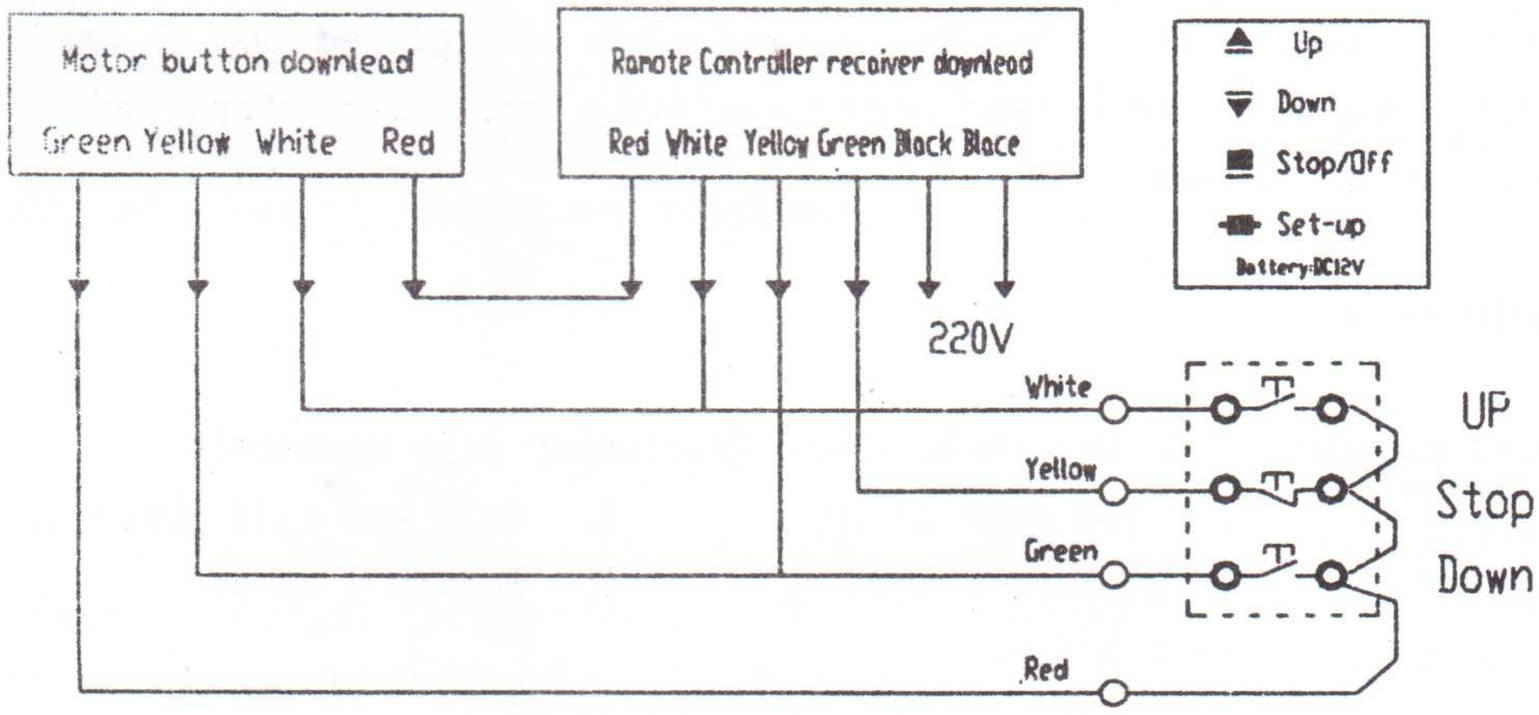

☆ See Connection diagram for right—side installation; change the position of white and green lines for left—side installation

☆ Uncover the pipe at the middle of the button line ,- Cut off yellow line to uncover lead line, and connect them separately

V. Trouble shooting

Problem	Analysis	Solution
No stop at upper and bottom positions	Incorrect connection of phases, and the position fails	Cut off power, check ,adjust and change
Up only ,or down only	Circuit contact fails, over low voltage < 185v , Electromagnetic iron weak in Attraction force	Polish contact or change relay, adjust voltage button contact, change magnet coil
No reaction	Button contact fails, position limiting switch contract fails, circuit cut off	Adjust and change joggling switch and relay
Non—stop Operation	Relay contact fused joggling switch out of control	Repair or change joggling switch and relay
Non—operation, only noise	Machine blocked, voltage too low	Remove block, adjust voltage

VI. Type Selection Formula

$$\frac{\text{Output torque T}}{\text{Total weight of shutter door G}} = \frac{\text{Motor Type - total lifted weight Kg}}{\text{Radius of rolling axle R}\times 9.8}$$

G=door material / m^2 × length × width (see attachment for details)

Material	Kg × m^2
Aluminum alloy	5-6
Mesh door	12
Power coated steel	8-14
Stainless- steel	10-18
Fire prevention door	25-36

Single-phase shutter door motor has obvious fluctuations of voltage, and therefore attention should be paid to voltage in type in type selection .

VII. Shutter Door Axle

When the door is more than 5m in width, with more than 3mm thickness and self—weight is above 350kg, 5 seamless pipe with more than 3mm thickness and zinc plated must be used to prevent pipe axle from bending which would lead to overload and a short life motor , and even directly damage teeth of motor' s gear

VIII. Motor Accessories:

1. Chain wheel support, 2. Big chain wheel (including axle connect);
3. Roller chain; 4. Drum core axles; 5. Axle and axle support;
6. Gearing board; 7. Support board×2; 8. Button / switch;
9. 3 meters of button / switch line;
10. Stainless steel switch box (equipped with night lock).

IX. Warranty Period

One year from the day of shipment; parts are offered at preferential prices.

X. Options

1. Wireless remote controller
2. UPS electricity storage device AT (220)
3. Fire prevention electric control system (A .C models); LTFV - temperature sensing metal blow controller;
4. Stainless steel switch.

Warning

Read this manual carefully before the installation. Installation, testing and maintenance must be carried out by specially qualified personnel.
Periodical maintenance should take place in order to ensure smooth operation. If you have any questions feel free to contact our company.

Safety

- The roller shutter door motors should be installed horizontally with precision.
- The roller axle of the shutter door should be homocentric and horizontal.
- The motor must be satisfactorily earthed to prevent potential injury from shocks. The earth connection bolts should be fixed to the chain wheel support board or electric appliance control box.
- The roller shutter should be free of any obstructions.
- The vertical hanging length of the chain must be adjusted within 3- 6 mm; adjustment should be made before hanging the shutter onto the roller axis.
- It is strictly forbidden to pull on the motor down lead.
- External power cord should be minimum 1 mm diameter.
- Special attention should be given to protecting the motor from humidity and rain, to prevent short - circuiting.
- The switch box has to be installed on the dry wall and placed at height of over 1.5 meters high, this is to ensure that children cannot operate the wall switch and remote controller.
- It is strictly forbidden to allow anyone or anything pass under the operating door.
- It is strictly forbidden to install the motor in combustible or explosive areas.
- Add appropriate lubricating oil into the chain rollers after motor resting; continue to do so when required

Prologue

ECR electronic rolling shutter motor is the product which our company has been producing many years. It utilizes most advanced product techniques combined with the latest technologies available to provide reliability with diverse functionality. The product has credible quality. It is simple to install and has proven to suit a wide variety of applications.

The motors can be installed to both Left and Right sides.

1. Work Environment and Conditions

1. Working temperature：≤55℃.
2. Relative working humidity：≤95 % (40℃).
3. Short - term working：
   a. Continual Single - Phase operation should not exceed 10 minutes
   b. Continual Three - phase operation should not exceed 20 minutes

2. Product characteristic:

- Simple pleasing design of structure with strong power.
- Good drive/size ratio.
- Selected elements ensure safe working, and reliability.
- Low noise levels.
- Small oscillation.
- Lightweight, simple installation.
- Simple manual operational patent of chain - break.

3. Installation and Testing:

ECR electronic rolling shutter motor is produced as standard for right side installation (Viewed from inside). If you wish to install to the left side, it is necessary to loosen four bolts on the brake-shell. This will allow you to turn the shell 180° and then re-tighten the bolts.

Note: The white and green lines of the switches should change positions.

The support board of the chain-wheel can be installed horizontally, according to the specific situation-as shown in Fig. 3 or it can be fixed within a range of 0- 45 degrees, When the support board is not installed horizontally the brake-shell must be turned so that the loop - type hand - pull chain can lie vertically in a normal manner.

Note: Special attention must be give to the joint of the shell- body and the top cover of the motor. When you are certain that three is no gap then tighten the bolts(diagonally). If a gap exists, and is allowed, the braking efficiency could be affected.

The phase order must not be violated for three- phase motors. When the rise - up becomes downside, the motors must be immediately stopped for readjustment of the phase order. If an interim power source is used for testing; attention should be given to connect in correct sequence when normal power source is introduced.
The correct operation approach is as follows: when the rise- up button on the White line is pressed, the motor should turn anti- clockwise, allowing the position limiting device to function. See Fig. 1 for details. Otherwise the shutter door would be of control and will be damaged.

Testing:

Screw cap position limiting slide piece model (Fig 2.1)

Loosen the Locking Bolts (No. 3) of position limiter, before testing, and then pull the hand chain to lift the door 1 meter above the floor. Press 'up' ', 'stop' and 'down' button, observe these functions of rolling shutter operation to see if they are correct. After you have confirmed that the door is working well, then operate the door up or down to the position that you desire, turn the position limiter slide piece (No. 6) until it touches joggling switch (No. 2) and you hear 'ticktack', Screw tight the Locking Bolt (No. 3), and repeat un till the limiter is at the best position. Finally screw the locking bolt tight again.

Gear form screw nut position limiting board model (Fig 2.2)

Loosen the Locking Bolts (No.3) of position limiter, before testing, Hold the middle of positing limiter board (No.6) with your fingers, push it 4mm to the left side←, and pull away the ↓ screw 4mm. The position limiting board will be separated from the gear from screw now. Turn the gear from screw nut (No.5) to set the door position, the method is the same as above. After setting the door position, hold the middle of posting limiting board (No.6) and push it back up ↑ to make the position limiting board infix gear backlash. (If it cannot infix, turn the gear from screw nut to fit it), and then push the position limiting board to the right side →4mm, so as to reach the bottom of gear backlash. Screw tight the Locking Bolt(No.3), and repeat the testing until the limiter reaches the desired position.

Fig 1 **Position Limiting Diagram**

1.1

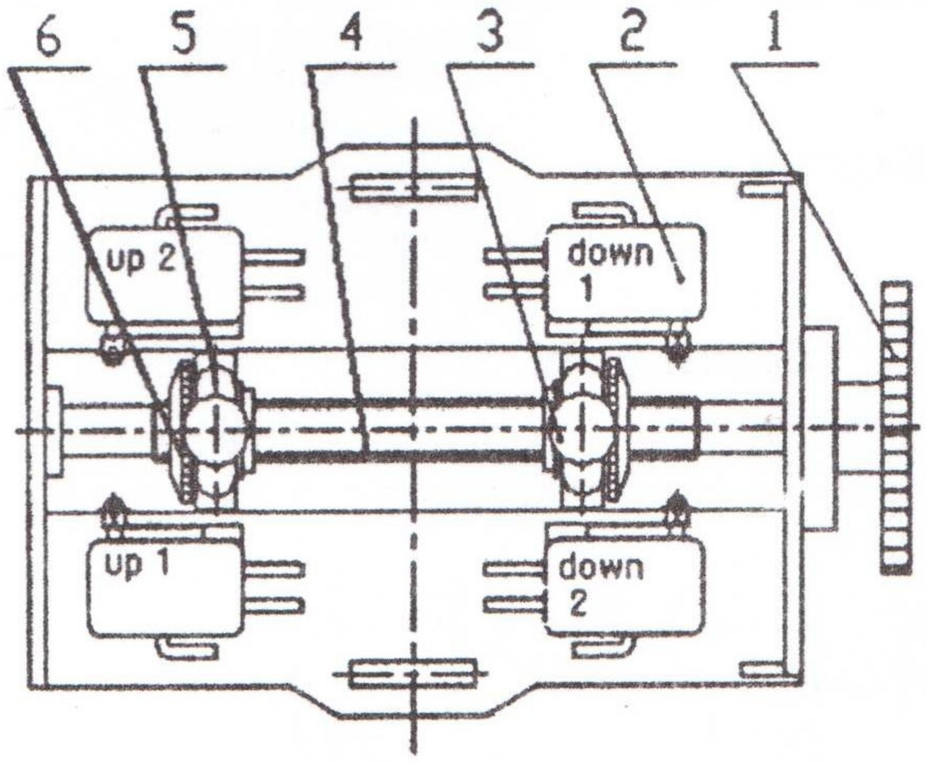

1. gear 2. joggling switch 3. locking bolt
4. gearing wire 5.position limiting screw nut
6.position limiting slide piece

1.2

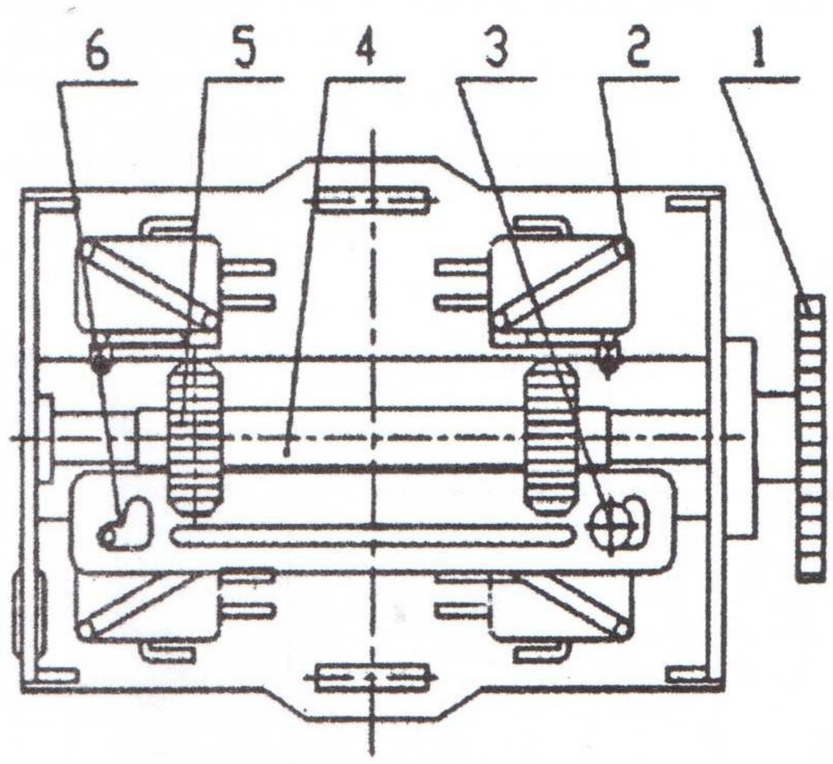

1. gear 2. joggling switch 3. locking bolt
4. gearing wire 5.gear form screw nut
6. position limiting board

Fig 2

Drum install Diagram

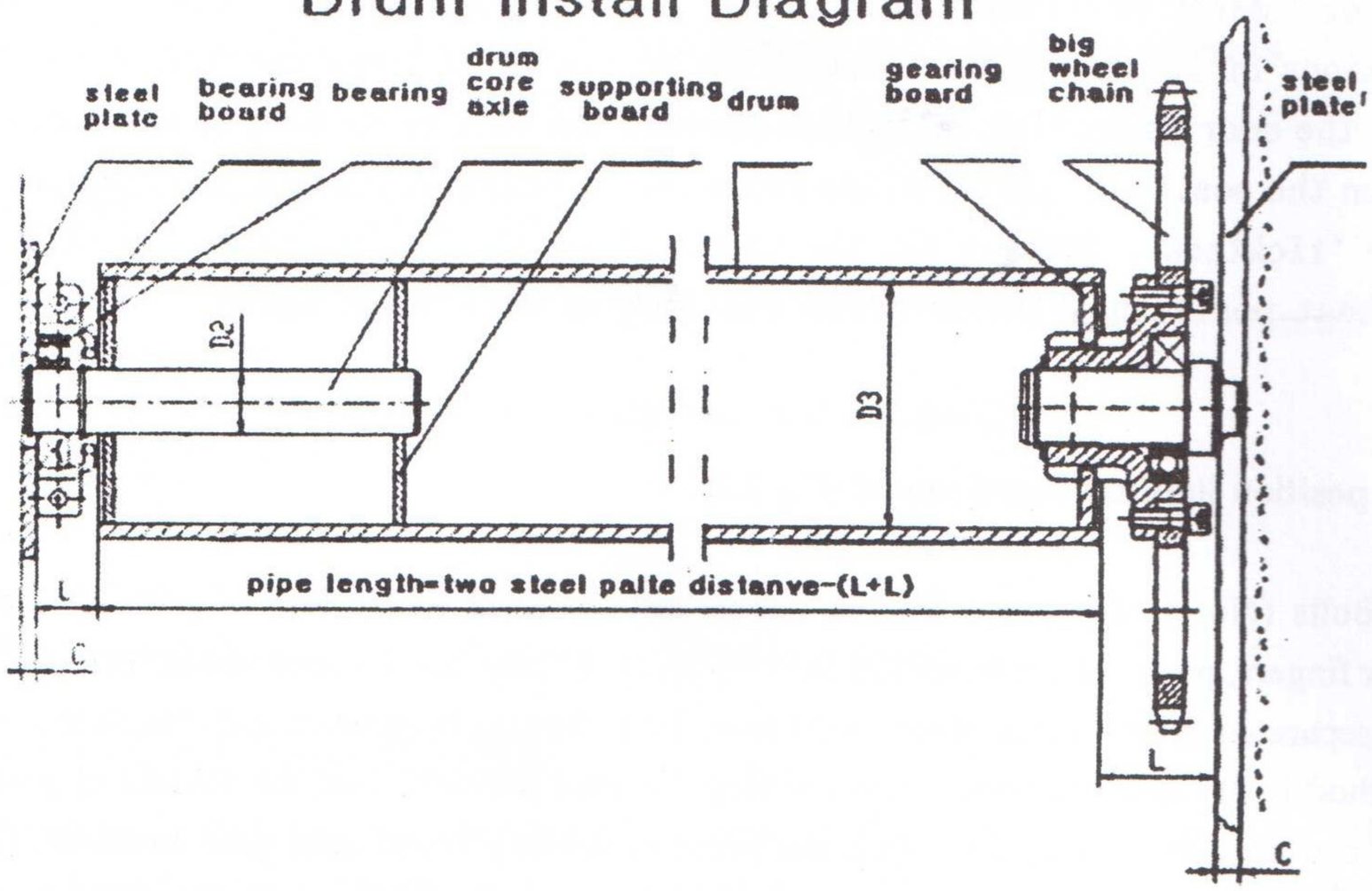

Drums install diagram data

model	D2	D3	L	C	Bearing	remark
600Kg	Φ35	5"	35	4	207	

Support plated installation diagram

Fig 3

Model A

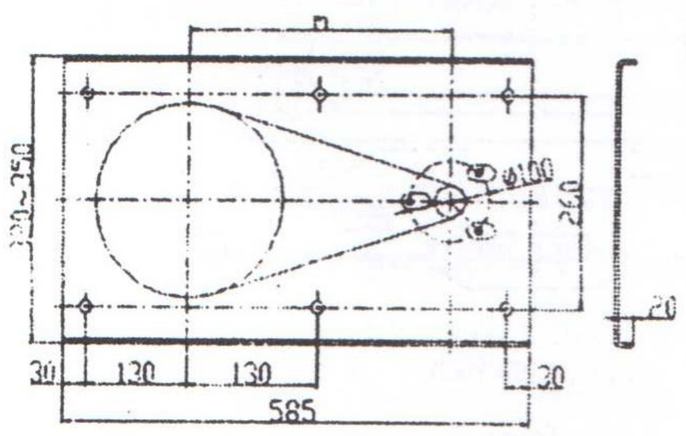

unit (mm)

General Model

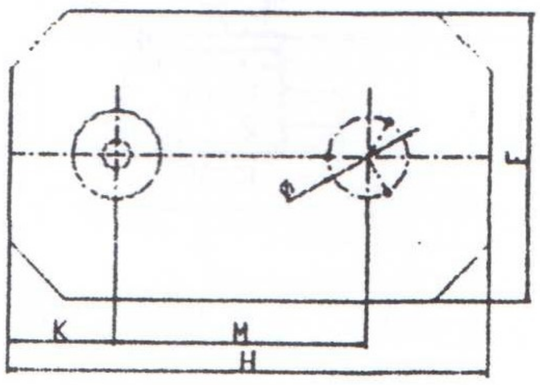

unit (mm)

Code no.	L	B	M	D	Φ
200 kg	450	220	264	100	
400 kg	450	220	273	115	100
300-600 kg	495	310	270	155	100
800 kg	585	350	316	175	156
1000 kg	620	400	345	183	156

Code no.	H	F	K	M	Φ
1300 kg	520	200	80	347	186
1500 kg	550	250	90	364	186
2000 kg	650	250	96	454	186

Normally use horizontal installation

(with white mark) black (zero) (non mark) black (fire)

4. Usage

Press "up" or "down" buttons. If there is no reaction—press the "stop" button to avoid potential damage to the motor.
Check to see if there are any obstacles beneath the shutter door before closing it. Passage under the shutter is forbidden during the process of opening or closing the door.
When closing the shutter, with the power off, lightly pull on the shutter door loop for downwards, even, controlled speed. Relax the pull on the pulling loop when the door is almost closed and then pull again to close it completely.
When opening the shutter, with the power off, strictly avoid putting the shutter over the height of the limiting position, ***Otherwise it may be out of control.***
Motors for fire shutter doors are equipped with separate control boxes. Specially qualified personnel should undertake regular and preventative maintenance and inspection.

Single-Switch Control

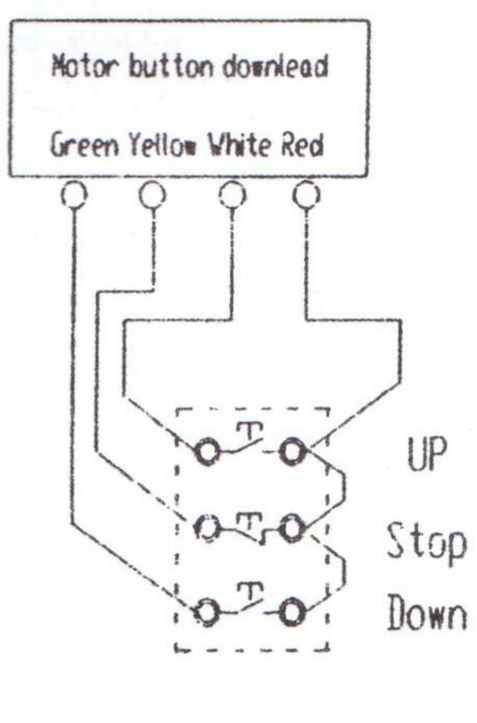

Double-Switch Dountead

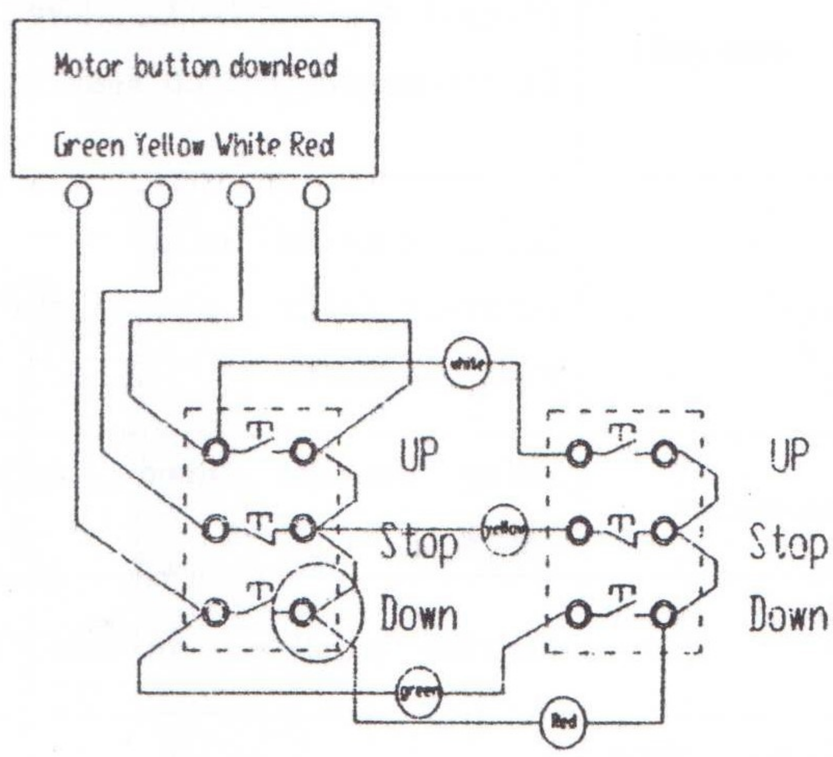

☆The above diagram shows right-side installation. See Connection diagram
For left-side installation - change the position of the white and green lines.

Remote control and rolling shutter motor (button switch) connection diagram

☆See Connection diagram for right-side installation; change the position of white and green lines for left-side installation.
☆Uncover the pipe at the middle of the button line, Cut off the end of the yellow line to uncover lead line, and connect them separately.

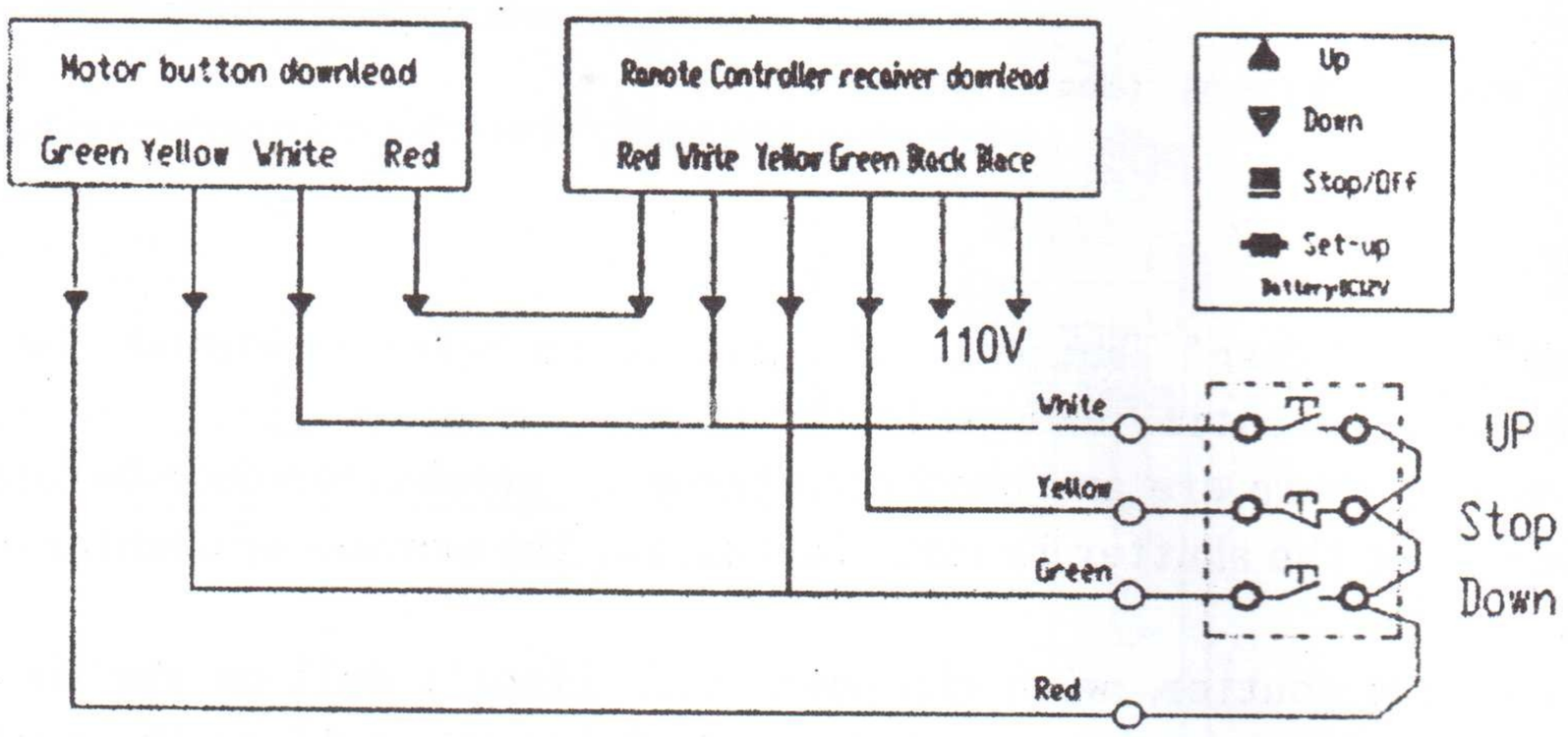

5.Trouble shooting

Problem	Analysis	Solution
No stop at upper and bottom positions	Incorrect connection of phases , and the position fails	Cut off power , check , adjust and change
Up only ,or down only	Circuit contact fails , over low voltage , Electromagnetic iron weak in attraction force	Polish contact or change relay, adjust voltage button contact, change magnet coil
No reaction	Button contact fails, position limiting switch contract fails , circuit cut off, without neutral wire connection	Adjust and change joggling switch and relay, connect neutral wire
Non - stop Operation	Relay contact fused , joggling switch out of control	Repair or change joggling switch and relay
Non-operation, only noise	Machine blocked , voltage too low	Remove block , adjust voltage
Shutter slide down after brake	Brake piece excess of abrasion	Check the spring of brake , add the shim .

6. Type Selection Formula

$$\text{Total weight of shutter door G} \frac{\text{Output torque T}}{\text{Radius of rolling axle R} \times 9.8} = \text{Motor type –total lifted weight Kg}$$

G=door material / ㎡ × length × width (see attachment for details)

material	aluminum alloy	Net door	PVC steel	Stainless steel	Fireproof door
KG × ㎡	5~6	12	8~14	10~18	25~36

Type and drum selection drawing

This diagram is drawn according to the national standard GB14102-2005 < fireproofing rolling shutter >, deflection ≤L /400, rolling shutter motor output torque, shutter gross weight and the span length.

Select method:

a) Single shutter type Selection weight G is actual weight×(1.1~1.2) ;
b) Then according to the shutter Model Selection weight(kg), find out the relevant point from Y-coordinate, and to the across 1. According to the maximal width (m) of door to find out the relevant point from the X-coordinate , upwards to vertical line 2 to the Y-coordinate at across point A. Then along the right level direction, to reach the next point B of pipe diameter diagonal line, that is the pipe diameter we want.
c) From point B up to the diagonal of type selection line is point C, which is the type of motor we want.

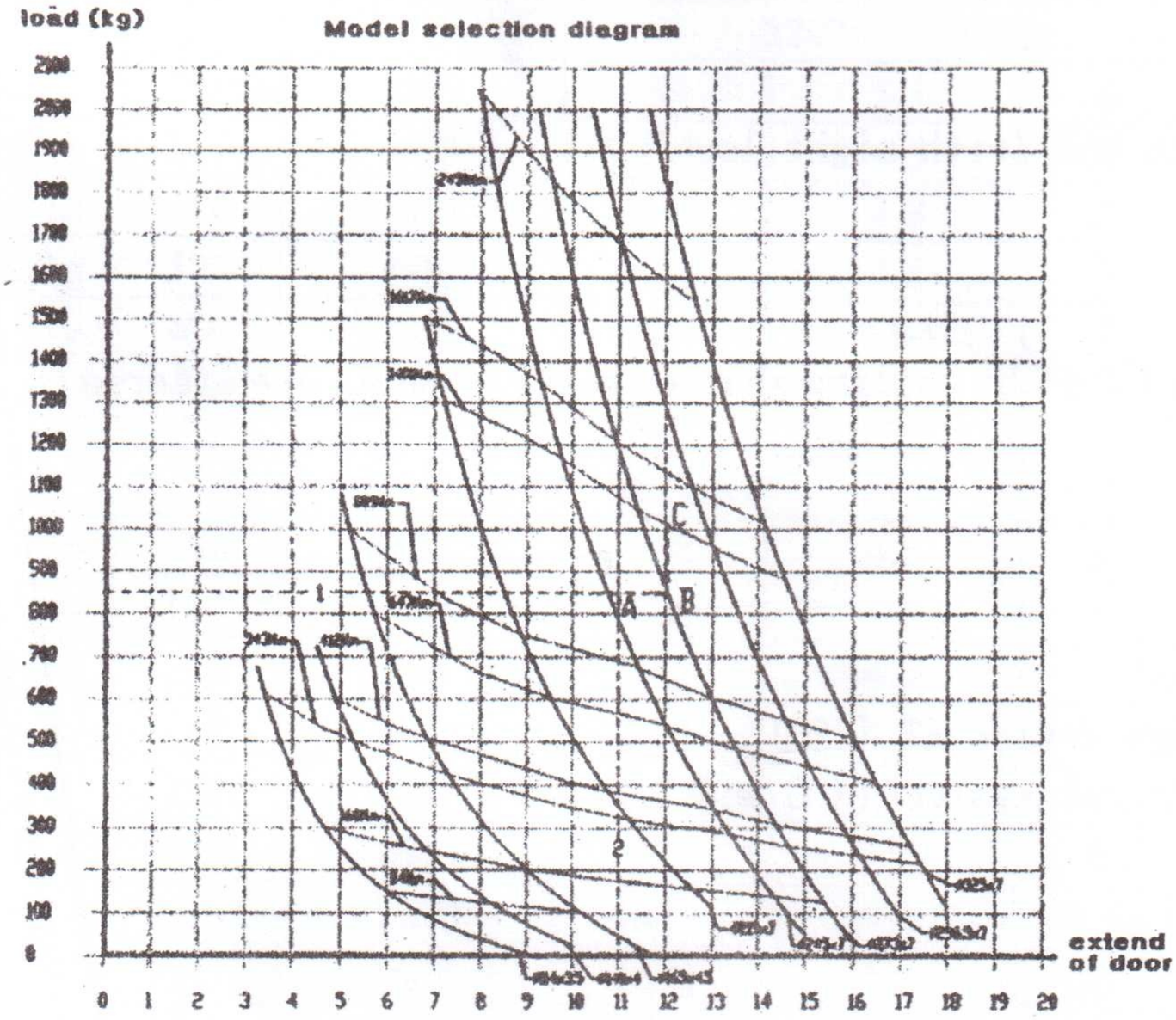

For example: the shutter maximal weight is 850kg and the door width is 11m ,what size of

pipe diameter and what kind of model shall we choose ?

a) From Y-coordinate select 850kg as line 1. Then from X-coordinate select 11m as line 2 to reach the across of point A, along right direction to the next point B. The pipe diameter and thickness Φ273×7 in pipe diameter line of point B, that is what we want.

b) From point B up to the closest model line at point C, The position of model 1401N.m is what we want.

- The deflection should be controlled less than 1/400, or when the door is more than 5m in width, with more than 3mm thickness and self-weight is above 350kg , 5 seamless pipe with more than 3mm thickness and zinc plated must be used to prevent pipe axle from bending which would lead to overload and a short life of motor, and even directly damage teeth of motor's gear .
- Single-phase shutter door motor has obvious fluctuations of voltage , and therefore attention should be paid to voltage in type selection .

7. Accessories with motor

1. Chain wheel support×1
2. Big chain wheel (includes axle connect) ×1
3. Rolling chain×1
4. Drum core axle×1
5. Axle and axle support×1 set
6. Gearing board×2
7. Supporting board×2
8. Button switch×1
9. Stainless steel switch box (with night lock) ×1

8. Warranty period

One year from the day of shipment for the rolling shutter motor. Parts are offered at preferential price.

9. Options

1. Wireless remote control
2. UPS electricity storage device AT (220)
3. Fireproof electric control system (A.C models);